STRONG PARTNERS.
TOUGH TRUCKS.™

EMPTY CONTAINER HANDLERS

H10-12XM-12EC

6 000 – 7 000 KG @ 1 220MM

BUILT WITH EXPERIENCE AND THE LATEST TECHNOLOGY

The latest generation of the Hyster H10-12XM-12EC Range of empty container handlers is a market leader, building on the unique experience and success Hyster has had of providing application focused solutions to customers in a wide range of empty handling applications for over 50 years.

This latest model is the 8th generation machine, and applies this experience, together with the latest advancements in technology, to create a range of Empty Container Handling trucks designed to achieve maximum productivity, through industry leading dependability, serviceability and ergonomics, thanks to:

- Full capacity up to to 9.175 mm or 3-high 9'6" and 12.163 mm or 4-high 9'6" lift height.
- Fastest lifting, with a practical average of up to 0.52 m /sec.
- Wide axle (extra wide for the 4-high stacking model) for excellent stability
- Class-leading ergonomics by Vista Cab.
- Rugged construction of mast, frame and drive train.
- 3-gear automatic transmission is standard and featuring protective lock-out on forward / reverse shifting.
- Engine and transmission protection systems as standard.
- O-Ring Face Seal fittings used to eliminate hydraulic leaks.
- Easy serviceability, with centralized, PC accessible diagnostics, superior, unobstructed access to key components thanks to the tilting cab and gull-wing hood
- Oil-immersed (wet disc) brakes contribute to increased productivity and reduced ownership costs.

CLASS LEADING ERGONOMICS

The H10-12XM-12EC series features the Hyster "Vista" cab, now common across the Hyster Big Truck range.

- The cab has been designed to offer an industry leading ergonomic operator environment, and focuses on maximizing driver comfort and visibility for maximum levels of productivity during the operating cycle.
- Access is easy, thanks to wide opening doors with low mounted running boards.
- Optional air-conditioning is integrated into the heating and ventilation system, with manual temperature control. Sunshade screens are fitted on the top and rear windows.
- The fully adjustable armrest adjusts with the seat height for minimised arm movement resulting in maximum driver comfort and reduced driver fatigue.
- The armrest houses the integrated joystick control for 'single-handle' intuitive control of mast lift & tilt, and sideshift, and separate switch(es) for: Spreader extension and (if fitted)Twistlocks. The controls are low effort to ensure smooth and effortless use.
- The truck features a fully adjustable full-suspension driver's seat with seat belt, "park brake off" warning buzzer and operator presence system.

- The fully adjustable steering column features loadsensing, power-assisted steering.
- The cab also features conveniently positioned joystick controls and instruments and a push-button parking brake.
- Responsive, fully hydraulic brakes and an automotive style pedal layout further contribute to driver confidence and comfort.
- The Hyster Vista Cab is equipped with a side mounted dash display - 4 bright LED warning lights mounted on the steering column inform the driver when he needs to refer to the dash display, ensuring that his/her attention is never unnecessarily diverted from the job in hand.
- The multi-function CAN-bus controlled display panel consists of a comprehensive array of gauges and backlit warning lights, including an LCD screen and error code facility.
- The spacious uncluttered floor covered with a high density rubber mat contributes to a low noise level of 73 dB(A) at driver's ear.
- The Hyster Vista cab is mounted on elastomer rubber mounts isolating and minimising the effects of road-born shocks and vibrations.

POWER & PERFORMANCE

The H10XM12EC and H12XM12EC are available with Cummins Diesel engines. These engines meets the Stage IIIA and Stage IIIB emissions legislation:

STAGE IIIA ENGINE:

This diesel engine conforms to Stage IIIA emission standards and will be supplied into markets where the NRMM (Non Road Mobile Machinery) Stage IIIB legislation does not apply.

The Stage IIIA Cummins QSB 6.7 diesel engine features:

- 6-cylinder-in-line industrial engine, with 6.7 litre capacity and charge-air cooling and waste gate turbocharger
- Max 116 kW (155Hp) output, offering extra durability for long periods of peak power operation.
- Smooth torque of 597 Nm at 1500 rpm provides excellent acceleration and lugging power.
- Engine protection system, acting on low oil pressure and high coolant temperature. The system initially derates the engine power and finally shuts down the engine. Includes and override function for emergency situation.

STAGE IIIB ENGINE:

For use mainly within EU (European Union) countries, trucks with Stage IIIB diesel engines have significantly reduced exhaust gas emissions. Also by applying Hyster Intelligent Design criteria, these trucks are not only cleaner running but also more economical, achieving up to a 20% fuel saving.

The Stage IIIB Cummins QSB 6.7L diesel engine features:

- 6-cylinder-in-line industrial engine, with 6.7 litre capacity and charge-air cooling and waste gate turbocharger
- Max 125 kW (170 Hp) output at only 1900 rpm, offering extra durability for long periods of peak power operation.
- Smooth torque of 732 Nm at 1500 rpm provides excellent acceleration and lugging power.

Engine protection system, acting on low oil pressure and high coolant temperature for the Stage IIIB engine. The system initially derates the engine power and finally shuts down the engine. Includes and override function for emergency situation.

NOTE: A Stage IIIB engine must run on Ultra Low Sulphur Diesel (ULSD) fuel, with a maximum of 15 ppm sulphur content. Diesel fuel with a higher sulphur content than 15 ppm will compromise the emissions performance of the Stage IIIB engine and may result in damage to components.

CCC of Stage IIIB engines.

Stage IIIB compatible Cummins QSB 6.7L engine is equipped with EGR (Exhaust Gas Recirculation) to meet new emissions requirements. The EGR affects the combustion process by reducing the NOx percentage in the exhaust gas. The system also includes a CCC (Cummins Compact Catalyst). The CCC contains a Diesel Oxidation Catalyst in a stainless steel canister. The DOC will oxidize remaining hydrocarbons in the exhaust gasses to CO_2

DRIVELINE

Autoshift Transmission

This powertrain is mated to the Z.F. 3WG161 3-speed autoshift transmission and the PRC-775 drive axle.

This 3-speed auto-shift system features:

- Smooth inching characteristic for precise load handling while stacking.
- A column-mounted lever for direction changes.
- A 'soft-shift' characteristic (through electronic 'throttleback' function during gear change). In addition to providing improved driver comfort, the system also eliminates shifting-shocks on the driveline.
- An 'on the move' forward-reverse shifting lock-out function, which protects the transmission and driveline against overloading, during abrupt direction changes.
- The transmission incorporates adjustable parameters for engine and travel speed, as well as featuring extremely smooth shifting and torque controlled inching for the best overall truck performance.
- Transmission protection system, acting on high oil temperature (warning light, buzzer and initial derate, followed by shut down).

DRIVE AXLE

The wide AxleTech drive axle offers:

- Excellent sideways stability.
- Long term durability thanks to the fitment of strong end-reduction shafts and gears.
- Oil-immersed 'wet disc' brakes feature oil cooling for durability and are virtually maintenance free
- Parking brake: Separate dry disc brake on the drive axle input shaft, spring applied and hydraulically released.

STEER AXLE.

The Hyster designed hydrostatic steer axle features

- Double-acting, single steering cylinder with adjustable end stops. It is renowned for its long lifespan and low maintenance requirements.
- Load-sensing power steering to ensure low-effort operation under all operating conditions.

SUPERIOR VISIBILITY

The Vista Cab also contributes to providing the driver with excellent all-round visibility, featuring:

- Large curved front window, fitted with tinted safety glass.
- Curved rear window with one-piece glass.
- Minimum use of steel parts, providing the maximum possible glazed area.
- Upward visibility is virtually free from obstruction, thanks to a clever overhead guard design: The overhead bars curve outwards to create a panoramic upward view.
- Wide-view rear view mirrors are fitted inside the cab.
- The dash display is mounted to the right hand side of the driver, so visibility through the windscreen is unobstructed.
- Front, rear and top wipers, washers and demisters, a fresh air inlet, sliding windows, an effective heater and defroster all combine to ensure that the driver has a clear view in all weather conditions.
- Excellent rearwards visibility is enhanced thanks to the sloping design of the hood and counterweight.
- A clear view to the front is optimised by using the Hyster Vista mast with:
  - Wide mast construction.
  - Rear-mounted lift cylinders (behind the mast channels), for minimum obstruction.

RUGGED FRONT-END CONSTRUCTION MATCHES APPLICATION REQUIREMENTS

All Hyster H10-12XM-12EC empty container handling trucks are equipped with heavy duty Vista masts.

- Designed with the modern FEM (Finite Element Modelling) system.
- Equipped with rollers and side bearing blocks for excellent lateral rigidity.
- Generous overlap of the mast channels for maximum durability.
- Proven design, with thousands of trucks built and operating today.

A COMPLETE EC SPREADER

The dedicated Hyster 20'-40' side lift empty container handling spreader is suitable for 8' to 9'6" high and 2 440-2 500 mm wide ISO containers.

- The spreader is available with Vertical Twistlocks engagement system.
- For wide container body a by 0-76 mm moveable Vertical Twistlock Spreader is available as Option
- The spreader features a unique mast over-lowering interrupt system, which prevents further lowering of the mast when the spreader is landed on a container. This is signalled by a blue warning light in the cab and serves to protect the spreader, the header hoses, header cable and lift chains.
- Lift counter on the spreader enables the number of containers handled to be monitored.
- '3-Colour, 4-lights' container spreader indicator lights are provided and signal engagement as follows:

  - Left-hand amber light indicates "landed";
  - green light indicates "locked";
  - red light indicates "unlocked"
  - right-hand amber light indicates "landed".
- Two sets of indicator lights are fitted: One set of 4 lights on the left-hand side of the spreader, plus one set of 4 lights in the cab roof (plus a blue light for the lift interrupt function).
- Mechanical interlock, mechanically locks the twistlocks unless the landing pins are properly pushed in.
- Lift interrupt, interrupts the lift mode if the twistlocks are not in a fully locked/unlocked position.

FAST MACHINE FOR MAXIMUM PRODUCTIVITY

To achieve maximum productivity, Hyster has equipped the H10-12XM-12EC series with high performance hydraulics and a powerful powertrain. The hydraulic system is highly efficient, and features 'Power on Demand' and 'Two-Speed Lift' functions.

- The result is lifting speeds that are class leading: The practical 4-mode average lifting speed with a diesel engine is a fantastic 0.41 m/sec. #)

#) Average of four lifting modes:

Unladen lift speed = 0.61 m/sec

Laden lift speed = 0.53 m/sec

Unladen lowering speed = 0.48 m/sec

Laden lowering speed = 0.50 m/sec

STRENGTH & STABILITY

Excellent stability boosts operator confidence and truck versatility, making the H10-12XM-12EC series ideally suitable for container handling.

- The H10-12XM-12EC series has been designed to handle loads to high lift heights.
- Due to the short load distance ("x" measurement as per VDI table) and high residual rear axle loading on the Hyster steer axle, these Hyster trucks have excellent stability.

EASE OF SERVICEABILITY

The Hyster H10-12XM-12EC series is renowned for its ease of maintenance. The truck is easy accessible with unobstructed access to the engine compartment and conveniently located service check points:

- Equipped as standard with either a manual or electric tilting cab, to ensure easy access to major components for service.
- Gas-spring assisted gull wing hoods for convenient access to engine compartment, reducing downtime.
- Low running boards, providing mechanics an excellent vantage point to work from.
- Window washer refill bottle located next to cab for quick, easy access.
- Clean electrical and hydraulic routings.
- Centralized diagnostics in the operator cab.
- 'CANbus' connections in the operator cab, for engine, transmission, hydraulics and instruments cluster.
- LCD display with diagnostics for engine, transmission and electrical systems to quickly identify service needs.
- Standard oil-immersed (wet) brakes are virtually maintenance free
- 500 hour service interval.

OTHER FEATURES

HYDRAULICS

Hyster two-speed system with regenerative function results in high lift speeds, in combination with a Hyster designed 2 stage mast.

- Leak-free ORFS (O-ring) type fittings are used throughout the whole machine.
- The hydraulic oil tank is equipped with an external sight glass for oil level.
- Filtration: Full-flow return line filter with 10 micron cartridge on the main system

COOLING

The H10-12XM-12EC is designed to operate in ambient temperatures of -18° C up to 50° C in normal applications, or up to 45° C for heavy duty operations.

Generously sized aluminum radiator block consists of four individually exchangeable sections:

1. Charge air cooler
2. Engine coolant
3. Brake and hydraulic oil
4. Transmission oil

- The air-intake is located at the top of the counterweight, to provide a cleaner air-flow.

ELECTRICS

- 24 Volt system, 70 A alternator.
- 'CANbus' connection in the operator cab, for engine, transmission, hydraulics and instruments cluster.
- LCD display with diagnostics for engine, transmission and electrical systems to quickly identify service needs.

LIGHTS

4 Front work lights lights mounted on top of the cab, 2 front drive lights, 2 front position and direction lights, 2 rear work/drive lights, 2 combination tail-, stopand back-up lights (LED), 4 indicators with hazard switch and 2 wide-beam work lights on the Hyster spreader.

STAGE III B ENGINE MODELS ADITIONAL FEATURES:

Auto Rev-Up: During lifting and tilting, the engine speed is automatically increased in relation to the joystick position. This feature is active when the transmission is in neutral and inching mode.

Drive Over Lift (DOL): Priority is given to driving and fitting at the same time. The hydraulic performance is reduced while driving. Hydraulic performance is automatically increased when engine speed (engine torque) increases. This feature ensures smooth truck operation under all conditions and assists in reducing operator fatigue.

High performance Mode (HiP): Selects the engine power mode. In the HiP mode the maximum power and torque is available for hydraulic and drive functions.

Economy Mode (ECO-eLo): With a key switch the ECO-eLo engine power mode is enabled. Throttle reaction is less aggressive which saves the fuel. The maximum RPM is reduced to 2000RPM, the duty cycle time is slightly impacted in this mode.

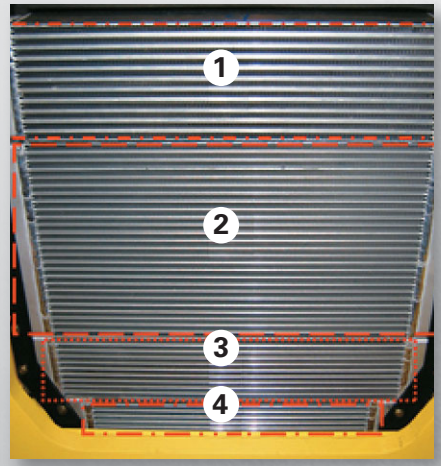

OPTIONAL EQUIPMENT

- Engine block heater
- Powered tilting cab for more convenient service access
- Radial pneumatic tyres
- Solid (pneumatic shaped) tyres
- Air conditioning
- Open driver module
- High backrest on seat
- Air suspended seat

- DELUXE air suspended seat with high back rest, optionally with and without heating element
- Trainer seat
- 24/12 volt DC-DC converter
- Hydraulic accumulator
- Back-up alarm (self-adjustable to 5 dB above ambient)
- Special RAL colours

- Reading light in the cab
- Sun shades: sliding screen under top window and against rear window of the cab
- Extra air re-circulation fan, inside the cab
- 3-point high visibility seat belt
- Load weight indicator

TRUCK DIMENSIONS

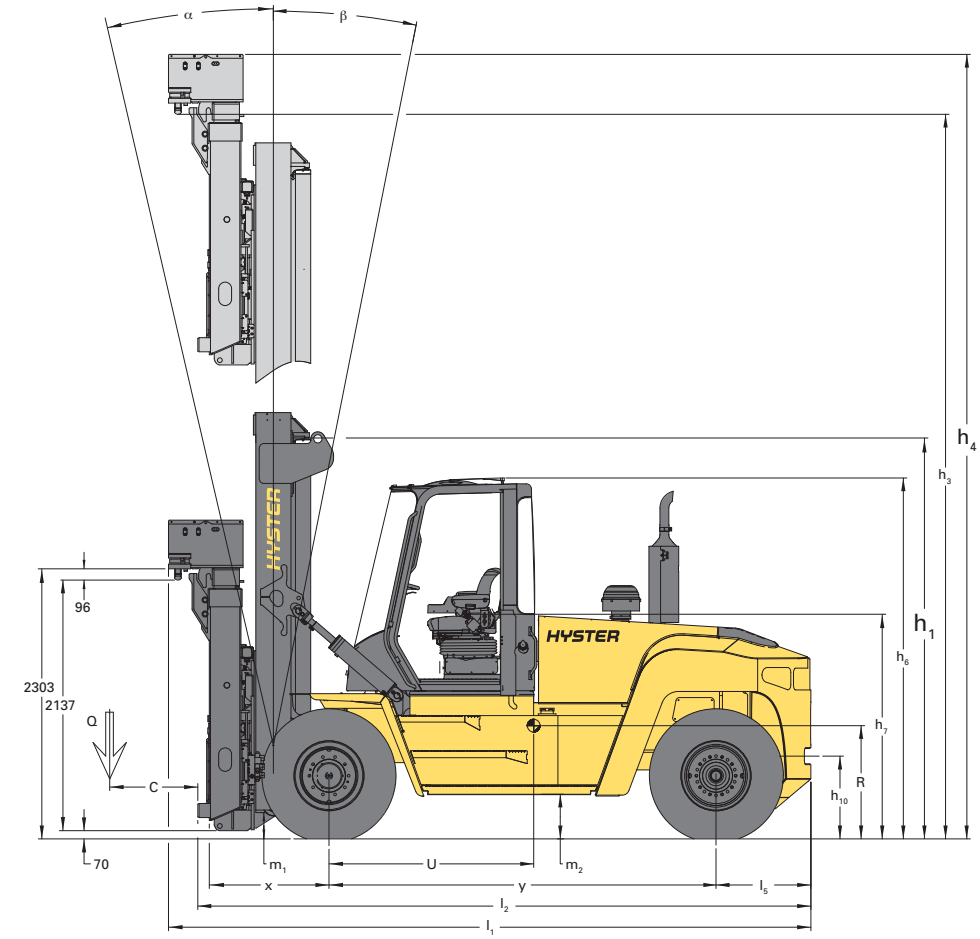

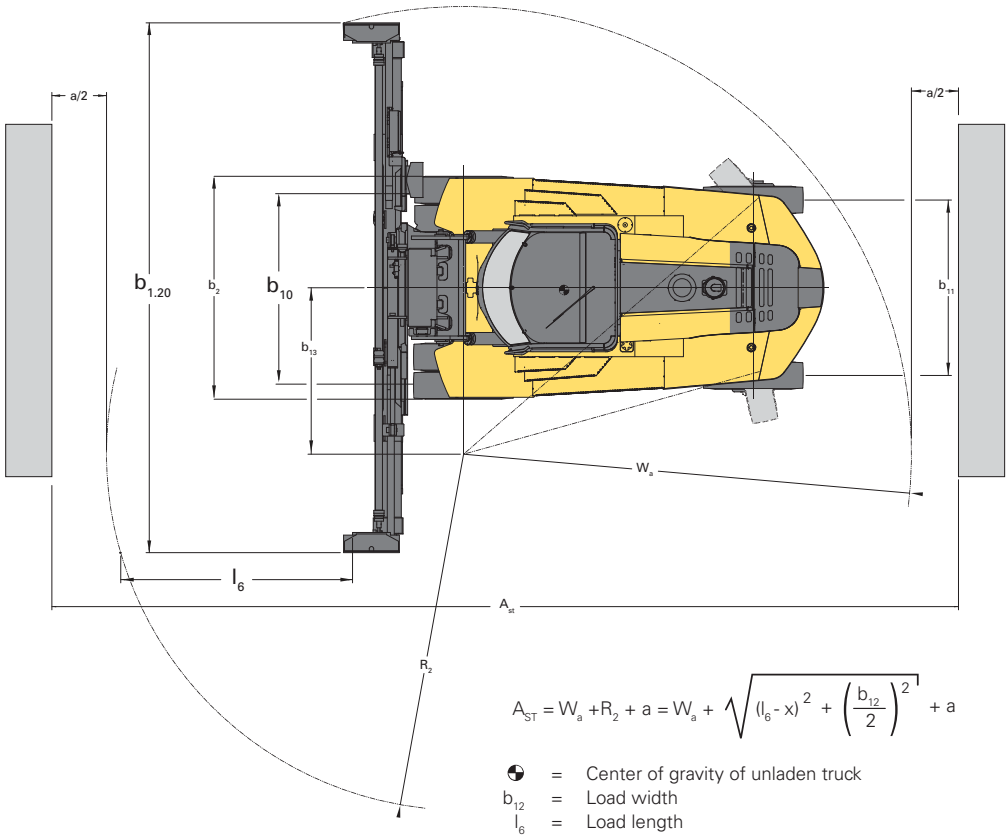

$$A_{ST} = W_a + R_2 + a = W_a + \sqrt{(l_6 - x)^2 + \left(\frac{b_{12}}{2}\right)^2} + a$$

◔ = Center of gravity of unladen truck
b_{12} = Load width
l_6 = Load length
a = Minimum operating clearance (VDI Standard = 200 mm BITA Recommendation = 300 mm)

TECHNICAL DATA

DISTINGUISHING MARKS	1.1	Manufacturer (abbreviation)		HYSTER		HYSTER	
	1.2	Manufacturer's type designation		H10XM-12EC		H12XM-12EC	
	1.3	Drive: electric (battery or mains), diesel, petrol, LPG		Diesel		Diesel	
	1.4	Operator type: hand, pedestrian, standing, seated, orderpicker		Seat		Seat	
	1.5	Load capacity/rated load ◎	Q (kg)	6000		7000	
	1.6	Load centre distance	c (mm)	1220		1220	
	1.8	Load distance, centre of drive axle to fork	x (mm)	1119		1119	
	1.9	Wheelbase	y (mm)	3300		3300	
WEIGHTS	2.1	Service weight ◇	kg	21393		2445	
	2.2	Axle loading, laden front/rear ◇	kg	23300	4093	26831	4627
	2.3	Axle loading, unladen front/rear ◇	kg	13123	8270	14958	9500
TYRES/CHASSIS	3.1	Tyres: L=pneumatic, V=solid, SE=pneumatic-shaped solid		L		L	
	3.2	Tyre size, front		12.00-20 18PR		12.00-20 18PR	
	3.3	Tyre size, rear		12.00-20 18PR		12.00-20 18PR	
	3.5	Wheels, number front/rear (x = driven wheels)		4X / 2		4X / 2	
	3.6	Tread, front	b_{10} (mm)	2276		2876	
	3.7	Tread, rear	b_{11} (mm)	2000		2000	
DIMENSIONS	4.1	Tilt of mast/fork carrige, forward /backward	α /β (°)	5	5	5	5
	4.2	Height, mast lowered	h_1 (mm)	5382		6877	
	4.3	Free lift ¶	h_2 (mm)	0		0	
	4.4	Lift ¶	h_3 (mm)	6922		9910	
	4.5	Height, mast extended	h_4 (mm)	8843		11831	
	4.7	Height of overhead guard (cabin) ■	h_6 (mm)	3064		3064	
	4.8	Seat height/stand height ⭘	h_7 (mm)	1791		1791	
	4.12	Coupling height	h_{10} (mm)	684		684	
	4.17	Overhang	l_5 (mm)	809		809	
	4.19	Overall length inclusive side lift spreader	l_1 (mm)	5228		5228	
	4.21	Overall width	b_2 (mm)	2607		3207	
	4.21.3	Overall width 20' spreader	$b_{1.20}$ (mm)	6096		6096	
	4.21.4	Overall width 40' spreader	$b_{1.40}$ (mm)	12192		12192	
	4.30	Reach, lateral from vehicle centerline ☎	b_8 (mm)	250		250 (300)	
	4.31	Ground clearance, laden, below mast	m_1 (mm)	203		203	
	4.32	Ground clearance, centre of wheelbase	m_2 (mm)	346		346	
	4.34.3	Aisle width with 20' Container	Ast 20(mm)	10371		10371	
	4.34.4	Aisle width with 40' Container	Ast 40(mm)	12198		12198	
	4.35.1	Turning radius with 20' Container crossway	Wa 20 (mm)	4931		4931	
	4.35.2	Turning radius with 40' Container crossway	Wa 40 (mm)	7929		7929	
	4.36	Internal turning radius	b_{13} (mm)	1754		1754	
PERFORMANCE DATA	5.1	Travel speed, laden/unladen Stage IIIA engine	km/h	26.6	28	26.3	27.9
	5.1	Travel speed, laden/unladen Stage IIIB engine	km/h	26.6	28	26.3	27.9
	5.2	Lifting speed, laden/unladen Stage IIIA	m/sec	0.52	0.61	0.52	0.61
	5.2	Lifting speed, laden/unladen Stage IIIB	m/sec	0.54	0.61	0.54	0.61
	5.3	Lowering speed, laden/unladen Stage IIIA engine	m/sec	0.5	0.48	0.5	0.48
	5.3	Lowering speed, laden/unladen Stage IIIB engine	m/sec	0.5	0.48	0.5	0.48
	5.5	Drawbar pull, laden/unladen Stage IIIA engine	kN	118.6	51.4	113	85.8
	5.5	Drawbar pull, laden/unladen Stage IIIB engine	kN	118.6	51.4	118	85.8
	5.7	Gradeability, laden/unladen Stage IIIA engine †	%	45	33	45	31
	5.7	Gradeability, laden/unladen Stage IIIB engine †	%	45	33	45	31
	5.9	Acceleration time, laden/unladen Stage IIIA engine	s	6.3	5.4	6.5	5.7
	5.7	Acceleration time, laden/unladen Stage IIIB engine	s	6.1	5.3	6.3	5.5
	5.10	Service brake		oil-immersed / wet disc		oil-immersed / wet disc	
ADDITIONAL DATA	10.1	Operating pressure for attachments	bar	193		193	
	10.2	Oil volume for attachments	l/min	100		100	
	10.3	Hydraulic oil tank, capacity	l	140		140	
	10.4	Fuel tank, capacity	l	128		128	
	10.5	Steering design		hydrostatic		hydrostatic	
	10.6	Number of steering rotation		3.7		3.7	
	10.7	Sound pressure level at the driver's seat ◇◇	dB(A)	73		73	
	10.7.1	Sound power level during the working cycle	dB(A)	109		109	
	10.8	Towing coupling, type DIN		yes / Pin		yes / Pin	

Specification data is based on VDI 2198

Equipment and weight:
Spec sheet truck based on: Complete truck with fully equipped cab with 6920mm or 9910mm BOF 2-stage Vista mast, dedicated carriage and 20'-40' telescopic empty container handling attachment.

NOTES:

Specifications are affected by the condition of the vehicle and how it is equipped, as well as the nature and condition of the operating area. If these specifications are critical, the proposed application should be discussed with your dealer.

- ◎ Standard, non-reefer container. For rating with reefer containers contact SPED.
- ■ h6 subject to +/- 5 mm tolerance
- ¶ Bottom of forks
- ⭘ Full suspension seat in depressed position
- † Gradeability figures (line 5.7) are provided for comparison of tractive performance, but are not intended to endorse the operation of the vehicle on the stated inclines. Follow instructions in the operating manual operation on inclines.
- ◇ Measured according to the test cycles and based on the weighting values contained in EN12053.
- ◇◇ Truck > 10 tonne capacity equipped with EC noise package. Noise level measured according to 2000/14/EC directive.
- ☎ Data available on request, as values are dependent on application.

All specifications and capacities quoted in the mast and capacity information tables are valid for trucks equipped with a Hyster empty container handling attachment and for handling ISO containers which are 8' wide and 8'-9'6" high.

Mast tables:
The rated capacities shown are for trucks equipped with dedicated 20'-40' telescopic empty container attachment and specified masts.

The capacities quoted are in conformance with the ISO 1074 standard for stacking and travelling.

Warning:
Care must be exercised when handling elevated loads. When the load is elevated, truck stability is reduced. It is important that mast tilt in either direction be kept to the minimum when loads are elevated. Operators must be trained and adhere to instructions contained in the Operating Manual.

Hyster products are subject to change without notice. Lift trucks illustrated may feature optional equipment. The capacities quoted are in conformance with standards ISO 1074 and 10525.

CE **Safety:** This truck conforms to the current EU requirements.

MAST AND CAPACITY INFORMATION

Values shown are for standard equipment. When using nonstandard equipment, these values may change. Please contact your Hyster dealer for information.

VISTA MASTS H10XM-12EC, 2 STAGE LFL

Stacking height	Lift height	Lowered height (mm)	Lowered height	Free lift height	Extended height	Side shift	Truck width	Capacity
8' - 9'6"	h3 + s (mm)	s (mm)	h1 (mm)	h2 + s (mm)	h4 (mm)	b8 (mm)	b2 (mm)	kg
3 high	9175	2253	5382	0	9635	250 s	2607	6000

VISTA MASTS H12XM-12EC, 2 STAGE LFL

Stacking height	Lift height	Lowered height (mm)	Lowered height	Free lift height	Extended height	Side shift	Truck width	Capacity
8' - 9'6"	h3 + s (mm)	s (mm)	h1 (mm)	h2 + s (mm)	h4 (mm)	b8 (mm)	b2 (mm)	kg
3 high	9175	2253	5382	0	9635	250 v (optional 600)	3207	7000
4 high	12163	2253	6877	0	12623	250 v (optional 600)	3207	7000

MAST TABLES:

▲ +/-600 mm sideshift (reefer correction) is NOT available on H10XM-12EC.
Select model H12XM-12EC instead when handling reefer containers.

❖ +/-600 mm sideshift (reefer correction) is available as an option on H12XM-12EC.
This option is mandatory when handling reefers.

POWERTRAINS

	1.3	Drive: electric (battery or mains), diesel, petrol, LPG		Diesel	Diesel
ENGINE	7.1	Engine manufacturer/type		Cummins QSB 6.7 Stage IIIA	Cummins QSB 6.7 Stage IIIB
	7.2	Engine power according ISO1585 (nominal) Stage IIIA	kW @rpm	116@1800	122@2300
	7.2.1	Engine power according ISO1585 (maximum)	kW @rpm	116 @ 2300	125@2200
	7.3	Rated speed	min^{-1}	2300	2300
	7.3.1	Torque (maximum)	min^{-1}	597 @1500	732/1500
	7.4	Number of cylinders/displacement	cm^3	6/6700	6/6700
	7.5	Fuel consumption according VDI cycle	l/h	call	call
DRIVE TRAIN	8.1	Type of drive unit		hydrodynamic 3 speed	hydrodynamic 3 speed
	8.2	Transmission manufacturer/type		ZF / WG161	ZF / WG161
	8.6	Wheel drive/drive axle manufacturer/type		Axle Tech / PRC 775	Axle Tech / PRC 775
	8.11	Service brake		oil-immersed / wet disc	oil-immersed / wet disc
	8.12	Parking brake		dry disc on drive axle	dry disc on drive axle

STRONG PARTNERS. TOUGH TRUCKS.™
FOR DEMANDING OPERATIONS, EVERYWHERE.

Hyster supplies a complete range of warehouse equipment, IC and electric counterbalanced trucks, container handlers and reach stackers. Hyster is committed to being much more than a lift truck supplier.

Our aim is to offer a complete partnership capable of responding to the full spectrum of material handling issues: Whether you need professional consultancy on your fleet management, fully qualified service support, or reliable parts supply, you can depend on Hyster.

Our network of highly trained dealers provides expert, responsive local support. They can offer cost-effective finance packages and introduce effectively managed maintenance programmes to ensure that you get the best possible value. Our business is dealing with your material handling needs so you can focus on the success of your business today and in the future.

HYSTER EUROPE
Flagship House, Reading Road North, Fleet, Hants GU51 4WD, England.
Tel: +44 (0) 1252 810261

www.hyster.eu **infoeurope@hyster.com** **/HysterEurope** **@HysterEurope** **/HysterEurope** **www.hyster-bigtrucks.com**

HYSTER and FORTENS are registered trademarks in the European Union and certain other jurisdictions.
MONOTROL is a registered trademark, and DURAMATCH and are trademarks in the United States and in certain other jurisdictions.
Hyster products are subject to change without notice. Lift trucks illustrated may feature optional equipment.
A division of NACCO Materials Handling Limited.

Form number: 901384/3. Printed in England. TLC/05/13